ZONE	REV.	REVISIONS DESCRIPTION	DATE	APPROVED

NOTES:

A. CABINET WEIGHT 75.0 LBS [34.09 KG]

B. SHIPPING WEIGHT 81.0 LBS [36.81 KG]

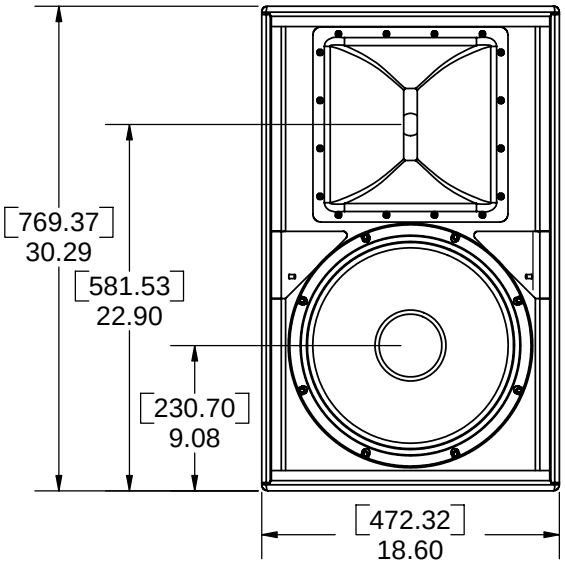

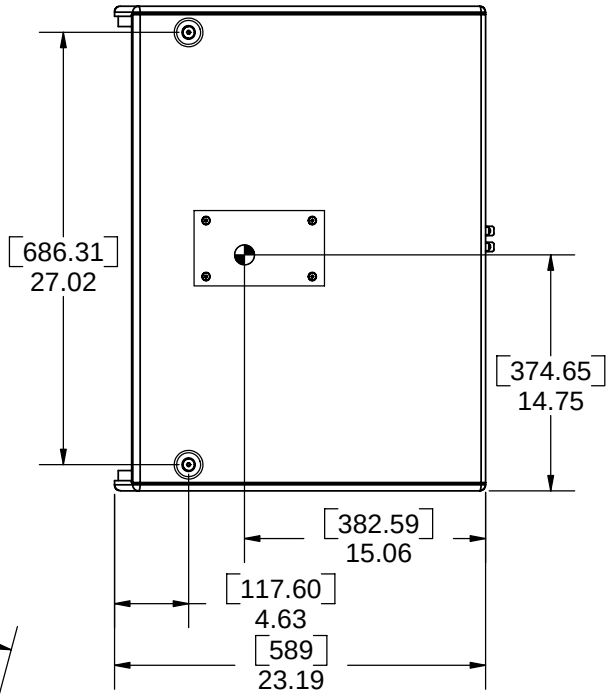

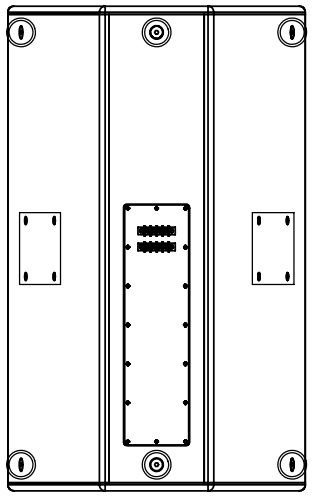

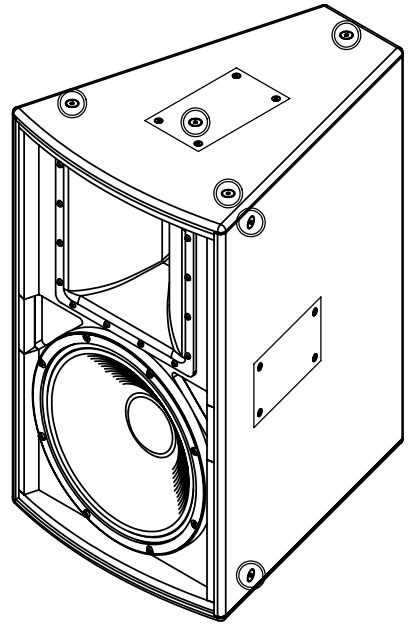

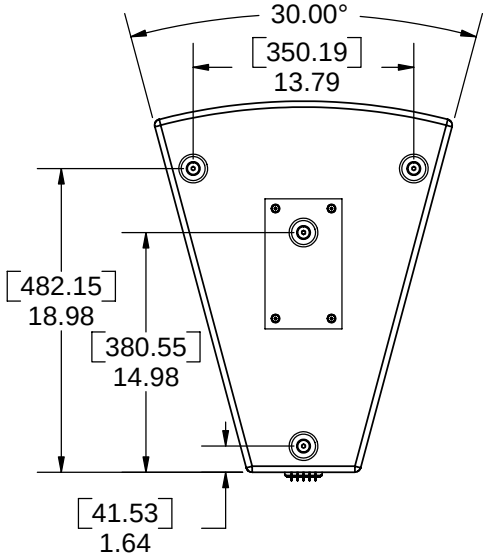

PROPRIETARY AND CONFIDENTIAL
THE INFORMATION CONTAINED IN THIS DRAWING IS THE SOLE PROPERTY OF **McCauley Sound Inc.** ANY REPRODUCTION OF SAID PRODUCT, IN PART OR AS A WHOLE WITHOUT THE WRITTEN PERMISSION OF **McCauley Sound Inc.** IS PROHIBITED.

PRIMARY UNITS US CUSTOMARY
SECONDARY UNITS SI
TOLERANCES:
LINEAR: ±0.125" UCS, ±3.17E-3 m SI
ANGULAR: ±.1°
BEND ±.5°
WEIGHT: ±0.1Lb UCS, BY MASS ±.045kg SI

STANDARD FINISH
Black ProCoat

OPTIONAL FINISHES
White

ORDERING OPTIONS
P, PW, W

	NAME	DATE
DRAWN	RM	071706
CHECKED	RM	071706

Denotes Center of gravity

5/18 X 18 T-NUT FOR 120 SERIES OMNI MOUNT

3/8 x 18 FLY POINT

DRAWING NOT TO SCALE

McCauley Sound Inc.
16607 Meridian Ave E
Puyallup, WA 98375
(ph 253-848-0363) (fax 253-841-3050)
www.mccauleysound.com
www.linearray.com

SIZE		REV.
A	ID3.115-96	1